STROMCORE BATTERY USER MANUAL

Stand Up Truck

SUD0003REV04 Rev.Date 2026-07-02

Table of Contents

SAFETY PRECAUTIONS 2
Equipment Warning Labels 3
Electrical Safety & Electrical Shock Prevention 3
Emergency & First Aid Procedures 4
1.0 Specifications 5
2.0 Battery Overview 6
2.1 Types of Battery Enclosures and Dimensions 6
2.2 Battery Components 7
Low Voltage Battery (36V, 48V) 7
High Voltage Battery (85V) 9
3.0 Installation Procedure 12
3.1 Required Tools 12
3.2 Installing the Battery 12
3.3 Secure the Battery in the Truck's Compartment 16
3.4 Connect and Secure the Accessories 17
4.0 Operating the Battery 18
4.1 Preliminary Checks 18
4.2 Turning ON the Battery 18
4.3 Charging the Battery 19
4.4 Disconnecting the Battery from the Charger 19
4.5 Activating / Deactivating Manual Disconnect (High Voltage Batteries) 19
5.0 Troubleshooting 20
5.1 Preliminary Checks 20
5.2 Restart the Battery 20
5.3 Unplug the Accessories 21
6.0 Upkeep 22
7.0 Appendix 23

SAFETY PRECAUTIONS
Failure to comply may cause injury or damage!

Read All Instructions: Before installing, operating, or servicing a Stromcore Battery, please ensure all user(s) have read this manual and thoroughly understand the safety procedures and precautions. It is important for the user to strictly observe all safety rules and precautionary actions. Failure to comply may increase the risk of and/or result in damage to other equipment, property, and/or can cause injury or death. For clarification on any section of the manual, contact your distributor or the manufacturer.

MANUFACTURER
Stromcore Energy Inc.
1-3705B Laird Rd., Mississauga, ON, L5L 0A6, Canada
289-269-0882
info@stromcore.com

It is recommended to keep this manual in good condition and always accessible to all users for the lifetime of the battery.

Use as Intended: Use the battery only for its intended purpose as specified in the manual. Do not modify the battery in any way. Stromcore Batteries can only be used with Stromcore rated chargers.

Qualified Personnel: Only qualified personnel should install, operate, or service a Stromcore Battery.

Environment: Place the battery in a well-ventilated area. Do not install the battery near any prolonged heat sources such as radiators or air ducts. Only heated Stromcore Batteries may be subjected to freezing temperatures, per specifications in Section 1.

Handling & Transportation: Ensure the system is ‘OFF’ and de-energized before beginning to service. The multimeter must read 0V to ensure the system is de-energized (Figure 20)

Warning: Incorrect use of the battery can cause electric shock, explosion, or fire in extreme circumstances. Use with caution.

RESPONSIBILITY DISCLAIMER
Stromcore Energy Inc. and all parties associated with it are not responsible for the use and results of this information by any party, especially those lacking sufficient skill or knowledge to perform these steps safely. Stromcore Energy Inc. will not be held liable for any hazard created by personnel performing the work without sufficient skill or knowledge.

ACKNOWLEDGEMENT
By accessing the components inside Stromcore batteries and chargers, the service provider acknowledges they understand the instructions provided and will perform the work in compliance with safety protocols, including but not limited to turning the equipment off and/or disconnecting power before commencing work. The service provider acknowledges Stromcore Energy Inc. will not be held liable for any errors resulting from unsafe actions or not reading and following the instructions relating to the specific task.

Equipment Warning Labels

Sharp Edge

Electricity

Heavy Object, Lift with Care

Electrical Safety & Electrical Shock Prevention
Electrical safety involves practices and guidelines aimed at preventing electrical injuries, shocks, burns, and fires. It is important to adhere to electrical safety guidelines to significantly reduce the risk associated with the use of electrical devices.

Charging the Battery: When charging the battery, ensure the battery is connected to a Stromcore rated charger.

De-energize the Battery for Service: Turn the battery “OFF” and ensure the system is de-energized before beginning any service work or cleaning. Use a digital multimeter to measure the voltage across positive and negative cables. The digital multimeter must read 0V before beginning any service work.

Protective Gear: When installing, operating, or servicing the battery, proper personal protective equipment (PPE) is required. Examples of PPE include, but not limited to, safety shoes, safety glasses, and gloves.

Cords and Plugs: Inspect power cords and plugs before use. Do not use if damaged. Replace or repair before operating the battery.

Damaged Cord: If the power cord is damaged, it must be replaced by the manufacturer, its service agent, or a qualified person.

Connections: Make sure all connections are secure and correct. Loose connections can cause electrical arcing and fire.

Overloading: Do not overload power outlets or extension cords. Use only adequately rated cables.

Emergency & First Aid Procedures

1. **Ensure Safety:** Do not touch the victim while they are in contact with the electrical source. If it is safe to do so, turn off the power to the charger from the electrical source. Use a non-conductive object to separate the victim from the electrical source.
2. **Call for Help:** Dial local emergency services immediately.
3. **Check for Responsiveness:** If unresponsive, begin CPR if trained.
4. **Monitor Condition:** Keep the victim calm and monitor their breathing and pulse until medical help arrives.
5. **Prevent Shock:** Lay the victim down and elevate their legs to prevent shock.

For more information, please see Stromcore Energy Inc.'s Safety Data Sheet (SDS): https://www.stromcore.com/sds.

1.0 Specifications

Enclosure	2C	2CN
Dimensions (Min)	38.4” (L) x 18.0” (W) x 31.0” (H)	38.4” (L) x 16.0” (W) x 29.0” (H)
Continuous Charge Current (Single Port)	250A (Canada A320) 300A (Canada LV500) 400A (USA)	
Continuous Charge Current (Dual Port)	500A (Canada A320) 600A (Canada LV500) 600A (USA)	
Nominal Voltage	36V, 48V, 85V	
Rated Capacity (36V)	300 – 1000AH	300 – 800AH
Rated Capacity (48V)	300 – 600AH	300 – 600AH
Rated Capacity (85V)	300AH	300AH
Output Interface Option	Euro (Single/Dual Output), Schaltbau	
Weight	2000 – 8000lbs	1000 – 2500lbs
IP Rating	IP54	
Chemistry	NMC	
Operating/Storage Temperature	-20°C – 45°C / -4°F – 113°F	
Operating/Storage Humidity	<75%	

NOTE
The photos in this document are for reference only. The actual product may vary.

2.0 Battery Overview

2.1 Types of Battery Enclosures and Dimensions

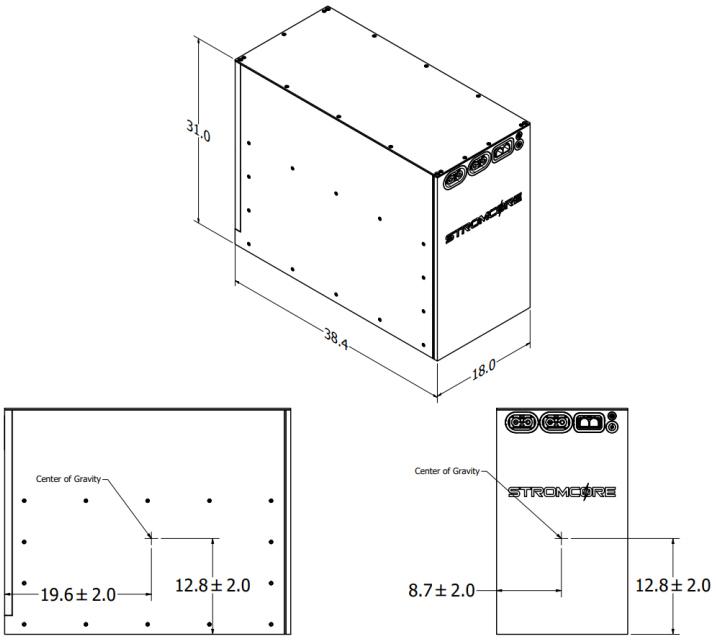

Figure 1: 2C Enclosure

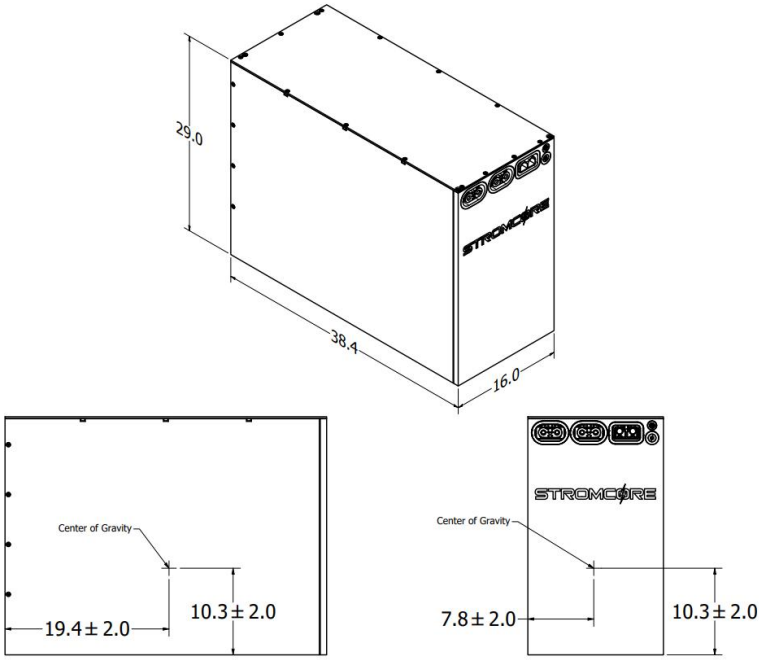

Figure 2: 2CN Enclosure

NOTE
Center of Gravity will shift down if side plates are added. An equal amount of weight withing +/- 100lbs, must be added to each side

2.2 Battery Components

Low Voltage Battery (36V, 48V)

Magnet: Used to turn ON/OFF the battery.

- The magnet should be kept at the facility and only accessed by a supervisor per shift.

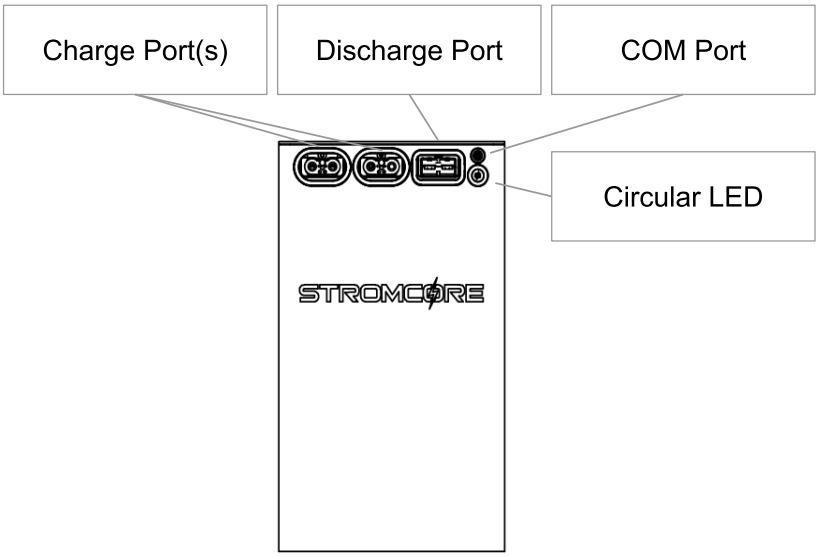

Figure 3: Reference image of a Stromcore battery's front panel.

Circular LED: Place the magnet against the circular LED and hold for 3 seconds to turn ON/OFF the battery.

Communication (COM) Port: Communicates data to the telemetry box for remote monitoring and the Battery Display Indicator (BDI).

Discharge Port: Connects to discharge jumper cable.

Charge Port(s): Connects to charge jumper cable(s).

Battery Label: Locate the battery label on the battery (Figure 4). This information is needed for installation and Stromcore Product Support.

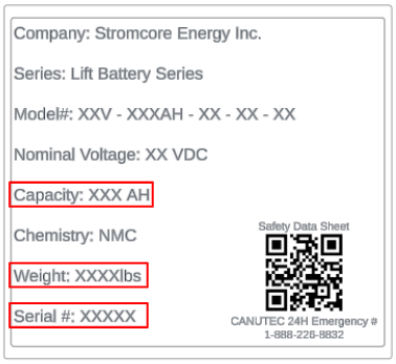

Figure 4: Example photo of a Stromcore battery label. Battery's capacity, weight, and serial number indicated in RED.

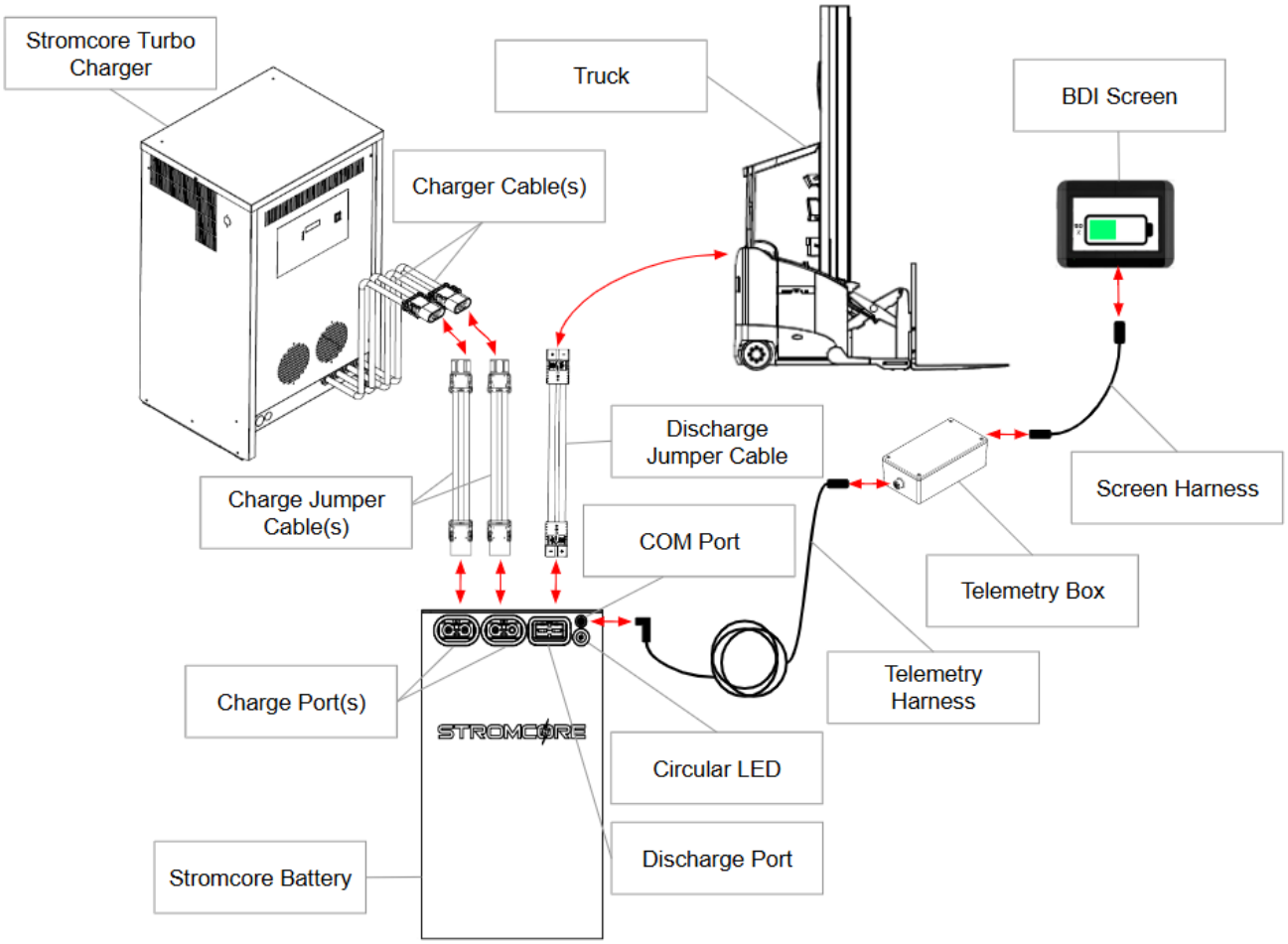

Figure 5: Image depicting Stromcore products and accessories, and where they connect.

Note: You may not have all the accessories depicted in Figure 5. For customers with BDI screens, please see Section 7.0 Appendix for more information.

High Voltage Battery (85V)

Magnet: Used to turn ON/OFF the battery.

- The magnet should be kept at the facility and only accessed by a supervisor per shift.

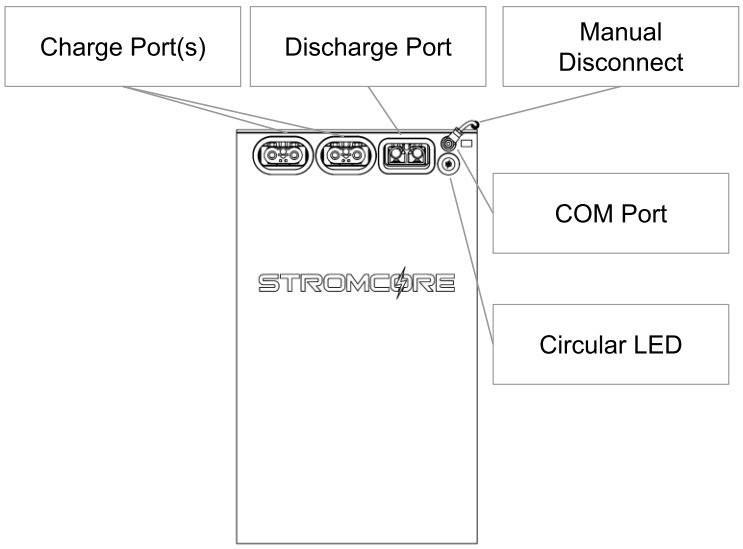

Figure 6: Reference image of a Stromcore battery's front panel.

Circular LED: Place the magnet against the circular LED and hold for 3 seconds to turn ON/OFF the battery.

Communication (COM) Port: Communicates data to the telemetry box for remote monitoring and the Battery Display Indicator (BDI).

Discharge Port: Connects to discharge jumper cable.

Charge Port(s): Connects to charge jumper cable(s).

Manual Disconnect: Disables the battery completely upon activation

Battery Label: Locate the battery label on the battery (Figure 7). This information is needed for installation and Stromcore Product Support.

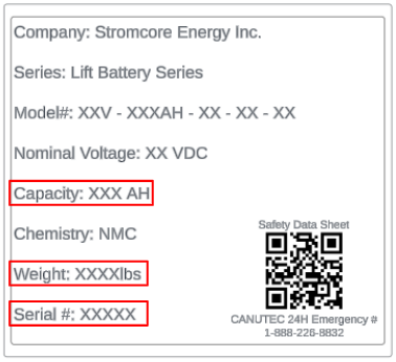

Figure 7: Example photo of a Stromcore battery label. Battery's capacity, weight, and serial number indicated in RED.

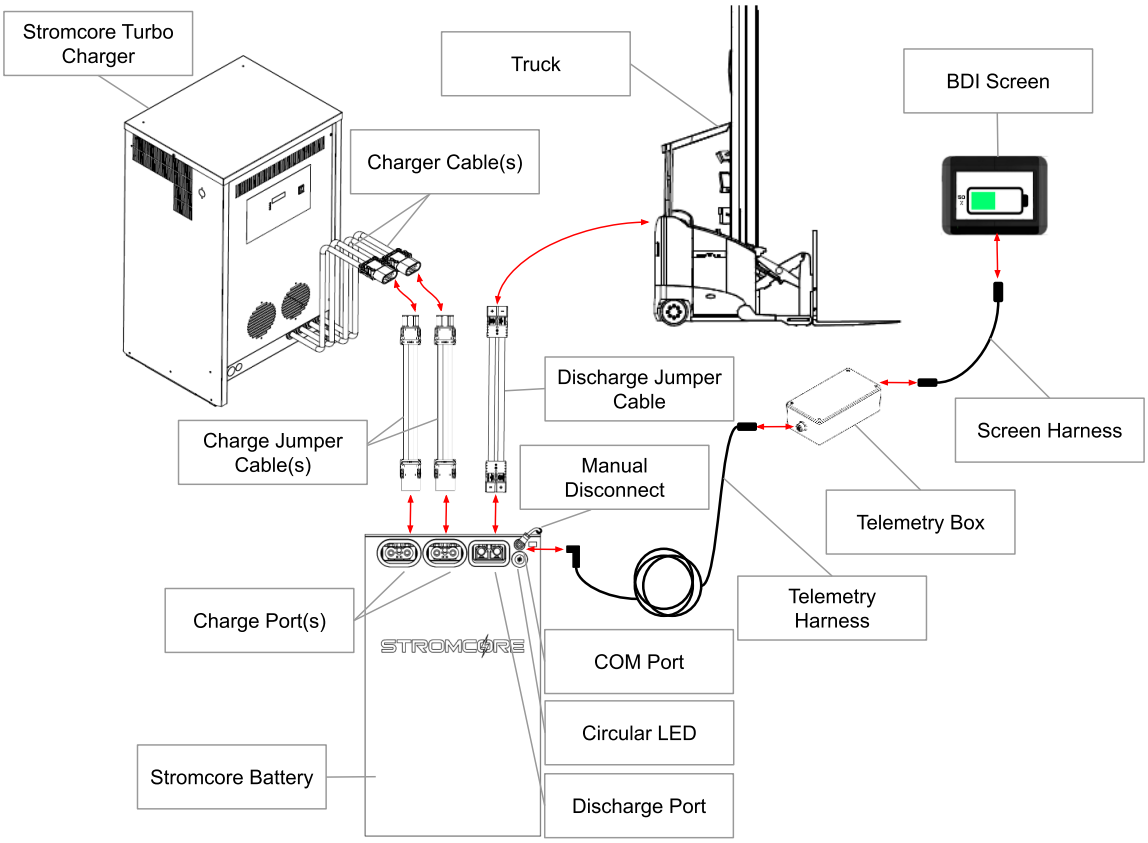

Figure 8: Image depicting Stromcore products and accessories, and where they connect.

Note: You may not have all the accessories depicted in Figure 8. For customers with BDI screens, please see Section 7.0 Appendix for more information.

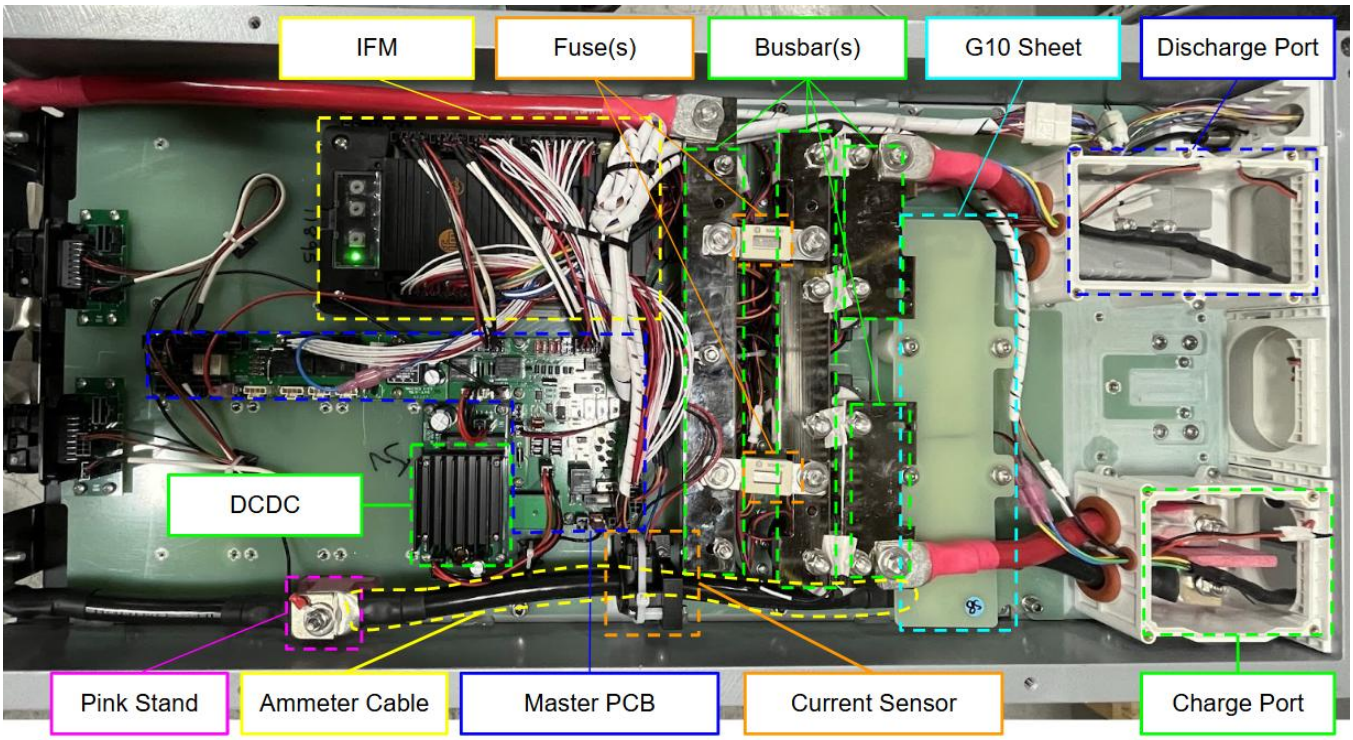

Figure 9: Image of battery with top lid open and powershelf components.

3.0 Installation Procedure

3.1 Required Tools

- Personal Protective Equipment (PPE) – Safety Shoes, Safety Glasses, Gloves)
- 1st forklift – for lifting battery onto rollers (capable of lifting battery weight)
- 2nd forklift – in which the Stromcore battery is being installed into
- M14 Lifting Hoists (x4)
- Lifting Straps/Chains (x2) – Minimum 6,000lbs lifting capacity
- Swivel Hook (optional)
- Rollers
- Allen Keys – 4mm, 5mm, and 6mm
- Hex Socket/Wrench – 10mm, 13mm, PH#2
- Power Drill
- Magnet

3.2 Installing the Battery

CAUTION !
Only qualified personnel can install the battery. Do not use the battery near flammable materials or gases. Do not install the unit near any heat sources such as radiators or air ducts. Do not make any modifications to the battery or installation of the charger.

1. Before beginning work, ensure the surrounding areas and forklift(s) are free from obstructions.
2. Install the M14 lifting hoists onto the battery with the power drill (Figure 10).

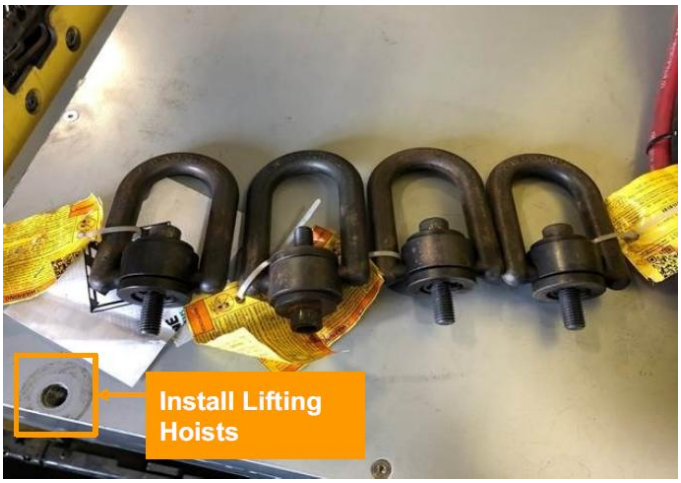

Figure 10: Image depicting where to install M14 lifting hoists on the battery.

3. Thread the 1st lifting strap through two (2) M14 lifting hoist loops on one side the of battery.
4. Repeat with the 2nd lifting strap on the other side of the battery.

Figure 11: Image of 4x M14 lifting hoists and three (3) lifting straps secured on the battery.

5. Position the battery with the front panel facing outward so that the charge/discharge/COM ports are accessible when installed into the 2nd forklift.
   - The ports will face outwards (towards the side) of the truck in a stand-up truck.
6. Slowly approach the battery with the 1st forklift.

7. Loop the lifting straps onto the forks of the 1st forklift (Figure 12)
8. Before lifting the battery, ensure lifting straps are not twisted or pulling on any obstruction.
9. Once secured, slowly lift the battery while ensuring the straps are not twisting or pulling on any obstruction (Figure 12).

Figure 12: Image of battery lifted by 1st forklift. Lifting straps are not twisted or pulling on any obstruction.

10. Lift the battery to the desired height and slowly approach the rollers.
11. Slowly position the battery over rollers.
    - Ensure the front panel and the ports of the battery are accessible when installed into the 2nd forklift.
    - The ports will face outwards (towards the side) of the truck in a stand-up truck.
12. Slowly lower the battery into the rollers.
13. Unhook the lifting strap from the 1st forklift.
14. Uninstall the remaining lifting straps and M14 lifting hoists on the battery.

15. Position the rollers in front of the 2nd forklift (in which the battery is being installed into) (Figure 13).
    - Ensure the front panel and the ports of the battery are accessible when installed into the 2nd forklift.
    - The ports will face outwards (towards the side) of the truck in a stand-up truck.
16. Slowly push the battery into the 2nd forklift's compartment.

Figure 13: Image of stand-up truck with Stromcore Battery aligned to truck's compartment. Ports are facing outwards and accessible.

17. Proceed to Section 3.3.

3.3 Secure the Battery in the Truck's Compartment

When installing the battery into the truck, ensure the battery is tightly secured in the truck's compartment (Figure 14).

Figure 14: Example photo of battery tightly secured in the truck's compartment.

To verify the battery is securely installed, inspect for gaps between the battery and the walls of the truck's compartment.

a. If the forklift is equipped with sliding brackets or set screws, use these features to secure the battery tightly within the compartment. Make sure that there's no gap between battery and these securing features
b. If gaps remain, fill them with spacers measuring at least 2" high x 3" wide (Figure 15). Recommended spacer materials include plastics with compressive yield strength greater than 20MPa. Examples of suitable material available from McMaster-CARR include:
    i. HDPE (High-Density Polyethylene)
    ii. Acetal
    iii. Nylon

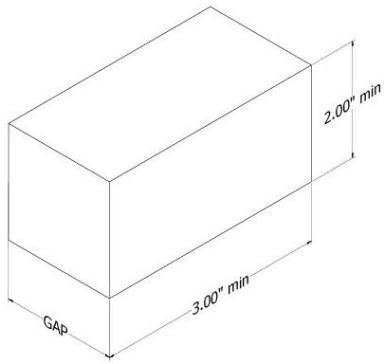

Figure 15: Illustration of spacer

c. If your battery is mounted on rollers, ensure the battery does not move by pushing against it to confirm it is properly secured.

Note: Batteries that are **not** secured in the truck's compartment may experience mechanical shock, leading to potential damage that is not covered under warranty.

3.4 Connect and Secure the Accessories

Note: Refer to Figures 5 and 8 as a reference only. You may not have all accessories mentioned in this section.

1. Connect the SB350 connector of the discharge jumper cable to the battery's discharge port.
2. Connect the truck SB connector of the discharge jumper cable to the appropriate port on the forklift.
3. Connect the Euro or Schaltbau charge jumper cable(s) to the battery's charge port(s).
4. Route the charge jumper cables towards the back of the forklift.
   - There may be an opening on the truck where the charge jumper cable can be routed through, towards the back of the forklift.
   - Ensure the jumper cables are secured within the forklift and are not at risk of being pulled, pinched, crushed, or damaged by an obstruction.
5. Perform a continuity check to ensure the positive and negative cables do not short.
6. Connect the 90-degree end of the telemetry harness to the COM port on the battery.
7. Connect the 8-pin connector of the telemetry harness to the telemetry box.
8. Connect the screen harness from the telemetry box to the BDI screen.
   - Secure the telemetry box and the BDI screen within the truck compartment and ensure it is not at risk of being damaged (Figure 16).
9. Check and push in all connectors to ensure there are no loose connections.
10. Ensure all cables and harnesses are secured within the forklift and are not at risk of being pulled, pinched, crushed, or damaged.
    - Use a zip tie to loop and shorten the length of the telemetry/screen harness where needed and secure to the truck.

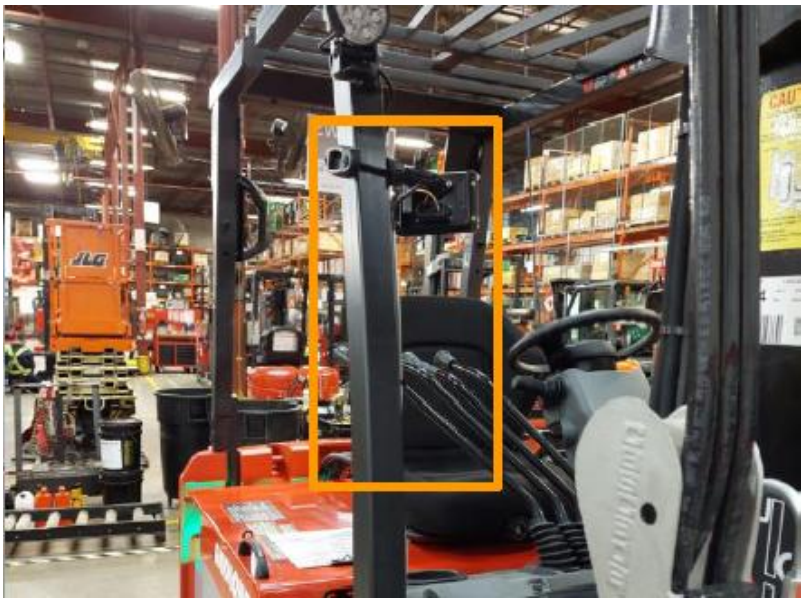

Figure 16: Image of BDI screen secured within the truck's compartment without any cables or harnesses at risk of being pulled, pinched, crushed, or damaged.

4.0 Operating the Battery

CAUTION !
Before beginning to operate the battery, ensure the battery has been properly installed following this manual. Only qualified personnel can operate the battery.

4.1 Preliminary Checks

1. Inspect the battery exterior for any loose screws, dents, rust, or damages.
2. Push in all accessory connectors to ensure there are no loose connections.
   - Check accessories for damages.
   - Check cables and harnesses for ripped insulation, pinching, or damages.
3. Ensure the battery is tightly secured in the truck's compartment as instructed in this manual.

4.2 Turning ON the Battery

1. Place the magnet against the circular LED and hold for 3 seconds (Figure 17).
2. After turning on the battery, the circular LED will illuminate. Wait at least 30 seconds for the battery to complete the bootup sequence (Figure 18).
3. If the discharge port is illuminated, the battery is ready for use (Figure 19).

Figure 17: No lights are illuminated, battery is OFF. Circular LED indicated in YELLOW.

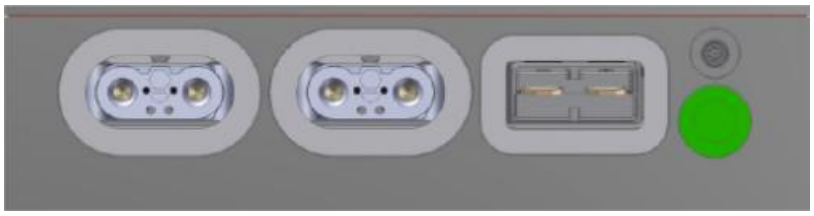

Figure 18: Circular LED is illuminated, battery is ON but not ready for use.

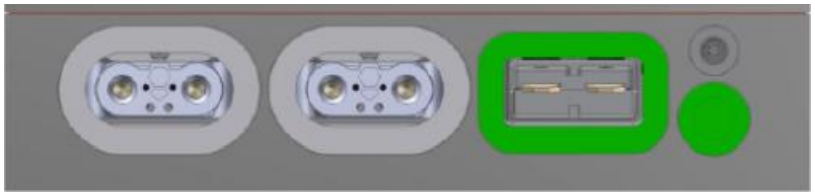

Figure 19: Circular LED and discharge port are illuminated, battery ON is ready for use.

4.3 Charging the Battery

1. Before connecting the battery to the charger, ensure the charger is a Stromcore rated charger and is rated correctly for the battery being charged.
2. With the appropriate charge cable, connect the charge cable from the charger to the charge jumper cable connector(s).
   - Euro (Single/Dual Output) or Schaltbau.
3. When the cable(s) is securely connected, the display screen on the charger will show “BATTERY CONNECTED”.
4. When the battery is being charged, the display screen on the charger will show the charging parameters voltage (V), delivered current (A), and battery SOC percentage (%). The “CHARGING” LED light will light up.
5. When the battery has reached 100% SOC, the display screen will display the most recent charging parameters.
6. The battery can be safely disconnected from the charger.

4.4 Disconnecting the Battery from the Charger

1. On the charger, hold the UP/Manual Stop button for 3 seconds.
2. The charging parameters on the display screen will display zero.
3. The battery can be safely disconnected from the charger.

4.5 Activating / Deactivating Manual Disconnect (High Voltage Batteries)

1. Locate the Manual Disconnect
2. Rotate the knob counterclockwise and remove the Manual Disconnect. This action will isolate the battery core and disable all ports
3. To enable the battery, simply connect the Manual disconnect and rotate the knob clockwise, and follow the steps highlighted in Section 4.2

5.0 Troubleshooting

5.1 Preliminary Checks

1. Inspect the battery exterior for any loose screws, dents, rust, or damages.
2. Push in all accessory connectors to ensure there are no loose connections.
   - Check accessories for damages.
   - Check cables/harnesses for ripped insulation.
3. Ensure the battery is tightly secured in the truck's compartment instructed in this manual.

5.2 Restart the Battery

1. **Restart the battery using a magnet:** Place the magnet against the circular LED and hold for 3 seconds (Figure 17).
   a. If the circular LED does not illuminate, contact Stromcore Product Support immediately and report this observation
   b. If the circular LED illuminate, wait at least 30 seconds for the battery to complete the bootup sequence (Figure 18)
2. If the discharge port is illuminated, the battery is ready for use (Figure 19)
3. If the discharge port is not illuminated after the bootup sequence (Figure 18), restart the battery 2 more times or proceed to Section 5.3.

5.3 Unplug the Accessories

If the issue is not resolved by restarting the battery, the battery may be experiencing a fault with an accessory.

Note: You may not have all the accessories listed below.

1. Plug in both ends of the following accessories:
   a. Screen harness (plug into back of BDI screen and telemetry box).
   b. Telemetry harness (plug the 8-pin connector into telemetry box and plug the 90-degree end of the connector into the battery).
2. Unplug each end of the harnesses in the following order:
   a. Screen harness - unplug from the BDI screen
   b. Screen harness - unplug from the telemetry box
   c. Telemetry harness - unplug from the telemetry box
   d. Telemetry harness - unplug from the battery
3. Restart the battery as per Section 5.2.
4. If the issue is not resolved and the discharge port does not illuminate, contact Stromcore Product Support and inform them of your findings. Provide the following information when contacting Stromcore Product Support:
   a. Serial number.
   b. Customer's company name and site location - City, State/Province (ex. Stromcore Energy - Toronto, ON).
   c. Your name and contact information (ex. First Name Last Name, name@email.com, 123-456-789).
   d. A description of the error you are reporting.

Note: In order to assist you more effectively, please ensure your L1 service provider is prepared with the following:

- Programming harness.
- An available laptop with the required software programs downloaded.

Contact Stromcore Product Support for more information.

Stromcore Product Support

Text / SMS: (289) 269-0882 | Quick Response Time

Phone General Service Line: 289-269-0882 - Select #2 | Quick Response Time

Email: service@stromcore.com | Response within the same Business Day

Hour of Operation: Monday - Friday 8AM–5PM EST | Appointments available 5PM–7PM EST (Scheduled min. 24 hours out)

6.0 Upkeep

1. Inspect the battery exterior for any loose screws, dents, rust, or damages.
2. Push in all accessory connectors to ensure there are no loose connections.
   - Check accessories for damages.
   - Check cables/harnesses for ripped insulation.
3. Ensure the battery is tightly secured in the truck's compartment instructed in this manual.

CAUTION !
When servicing a Stromcore product, it is crucial for technicians to be aware of live voltage. Before beginning any service work, technicians must turn off the battery and ensure systems are de-energized. Use a digital multimeter to measure the voltage across positive and negative cables. The digital multimeter must read 0V (Figure 20).

Figure 20: Image of de-energized Stromcore battery. The digital multimeter is showing 0V across the positive and negative cables at the discharge port.

ACKNOWLEDGEMENT
By accessing the components inside Stromcore batteries and chargers, the service provider acknowledges they understand the instructions provided and will perform the work in compliance with safety protocols, including but not limited to turning the equipment off and/or disconnecting power before commencing work. The service provider acknowledges Stromcore Energy Inc. will not be held liable for any errors resulting from unsafe actions or not reading and following the instructions relating to the specific task.

7.0 Appendix

Battery Display Indicator (BDI) Screen: Displays the State of Charge (SOC) of the battery within 1% accuracy.

a. **GREEN and Lightning Bolt** (Figure 21)**:** The battery is connected to the charger and is receiving charge current.

Figure 21: BDI screen displaying GREEN and Lightning Bolt.

b. **ORANGE and CHARGE NOW** (Figure 22)**:** Battery SOC at 11-20%. Connect to a charger as soon as possible.

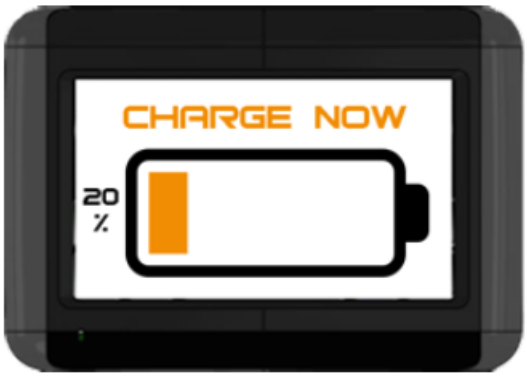

Figure 22: BDI screen displaying ORANGE and CHARGE NOW.

c. **ORANGE and SAFE LOCKOUT** (Figure 23): Battery SOC at 10% or is experiencing a fault. The battery will not power the truck.
   i. Contact the manager and use the magnet to exit SAFE LOCKOUT.
   ii. After exiting SAFE LOCKOUT with a magnet, connect the battery to a charger immediately.
   iii. If the battery reduces to 5%, the battery will shut down and may only be reactivated by Stromcore. Contact Stromcore Product Support.
   iv. If the battery is able to correct the fault, it may exit SAFE LOCKOUT without the use of a magnet. Report to Stromcore Product Support of this instance.

Figure 23: BDI screen displaying ORANGE and SAFE LOCKOUT.

d. **RED and PARK NOW** (Figure 24)**:** The battery is about to auto shut off. The operator must halt all activity, disembark the truck and alert their supervisor.
   i. Battery SOC is <5%. Contact Stromcore Product Support.
   ii. The battery was not able to correct the fault without a magnet or be turned ON with a magnet. Contact Stromcore Product Support.
   iii. If the BDI screen and battery turns OFF without this warning (Figure 24), the battery is experiencing a failure. The operator should halt all activity, disembark the truck and contact Stromcore Product Support immediately. Do not tamper with the battery at any point.

Figure 24: BDI screen displaying RED and PARK NOW.

Contact Stromcore Product Support and inform them of your findings. Provide the following information when contacting Stromcore Product Support:

a. Serial number.
b. Customer's company name and site location - City, State/Province (ex. Stromcore Energy - Toronto, ON).
c. Your name and contact information (ex. First Name Last Name, name@email.com, 123-456-789).
d. A description of the error you are reporting.

Stromcore Product Support

Text / SMS: (289) 269-0882 | Quick Response Time

Phone General Service Line: 289-269-0882 - Select #2 | Quick Response Time

Email: service@stromcore.com | Response within the same Business Day

Hour of Operation: Monday - Friday 8AM–5PM EST | Appointments available 5PM–7PM EST (Scheduled min. 24 hours out)